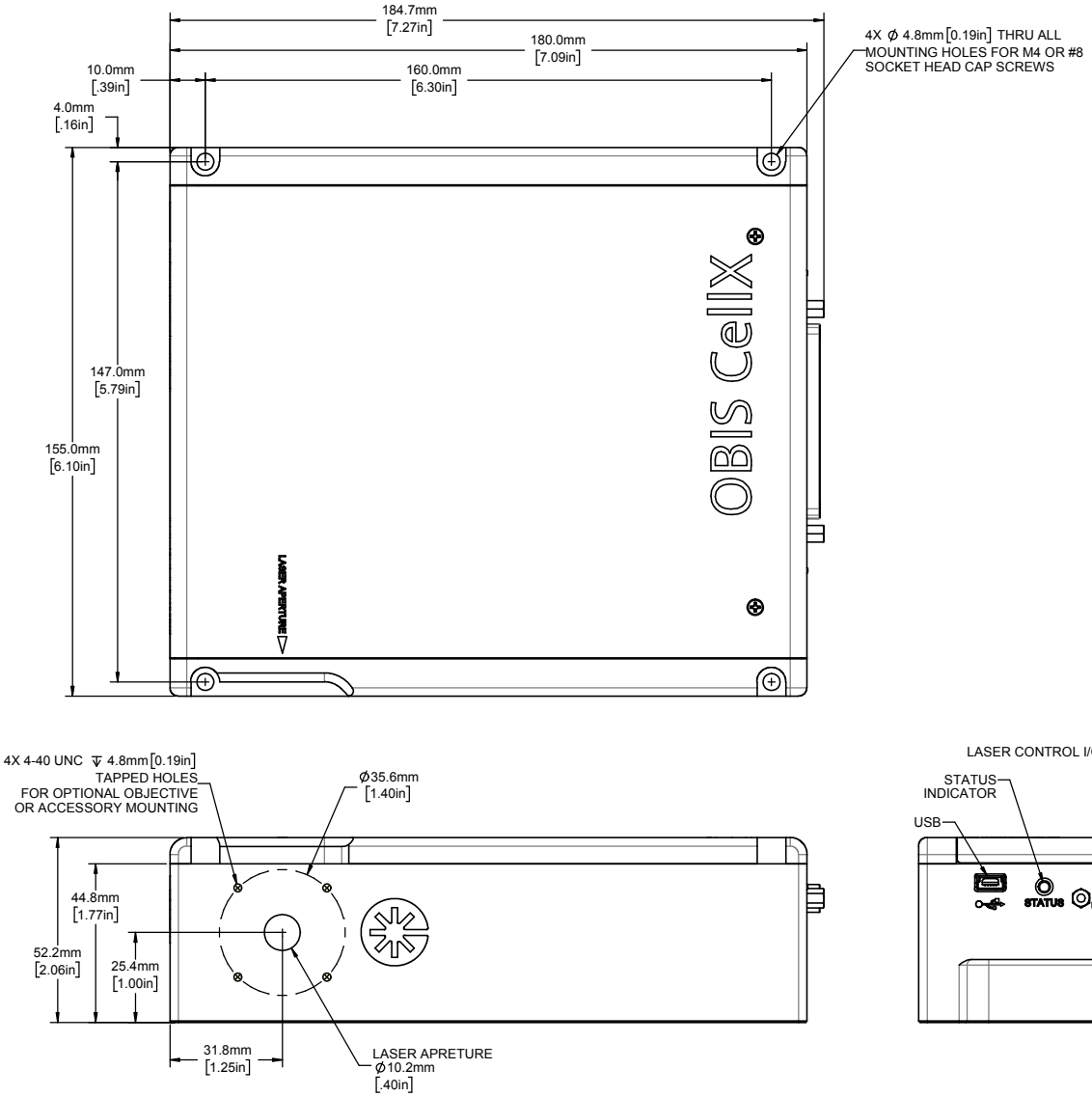
184.7mm
[7.27in]
180.0mm
[7.09in]
160.0mm
[6.30in]
10.0mm
[.39in]
4.0mm
[.16in]
147.0mm
[5.79in]
155.0mm
[6.10in]
4X Ø 4.8mm [0.19in] THRU ALL
MOUNTING HOLES FOR M4 OR #8
SOCKET HEAD CAP SCREWS
OBIS CellX
LASER APERTURE
4X 4-40 UNC ↧ 4.8mm [0.19in]
TAPPED HOLES
FOR OPTIONAL OBJECTIVE
OR ACCESSORY MOUNTING
Ø35.6mm
[1.40in]
44.8mm
[1.77in]
52.2mm
[2.06in]
25.4mm
[1.00in]
31.8mm
[1.25in]
LASER APRETURE
Ø10.2mm
[.40in]

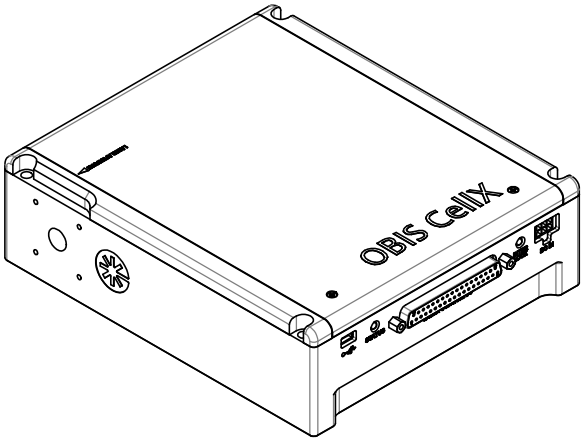
OBIS CellX

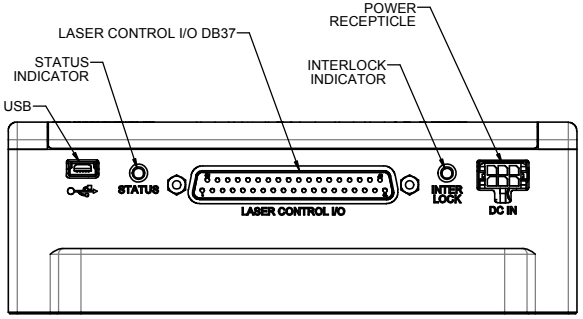
POWER
RECEPTICLE
LASER CONTROL I/O DB37
STATUS
INDICATOR
INTERLOCK
INDICATOR
USB
STATUS
LASER CONTROL I/O
INTER
LOCK
DC IN

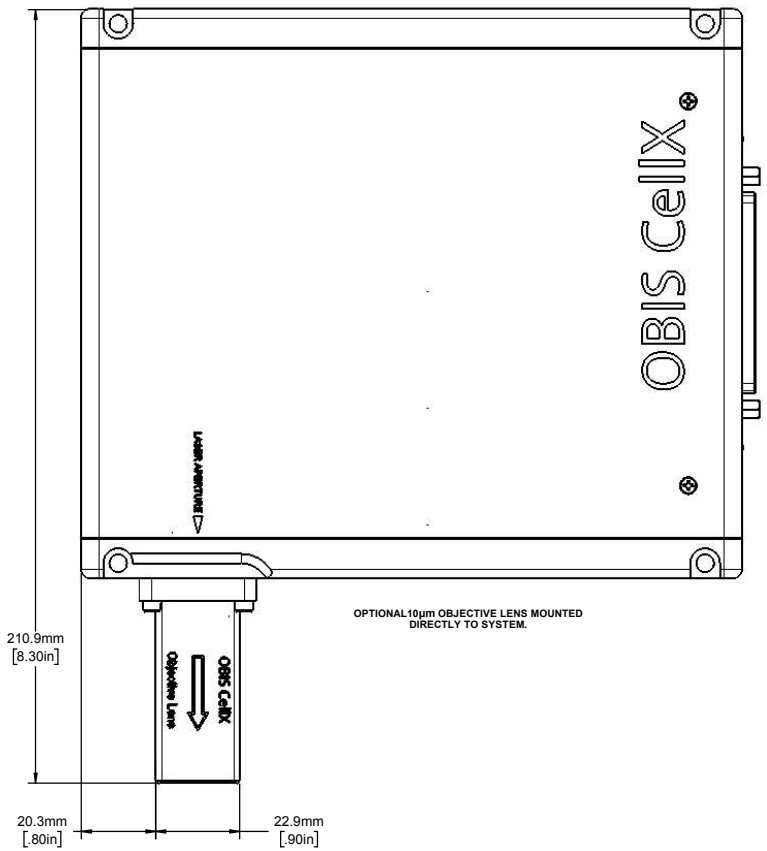
OBIS Cellx
LASER APERTURE
OPTIONAL 10µm OBJECTIVE LENS MOUNTED
DIRECTLY TO SYSTEM.
210.9mm
[8.30in]
OBIS Cellx
Objective Lens
20.3mm
[.80in]
22.9mm
[.90in]

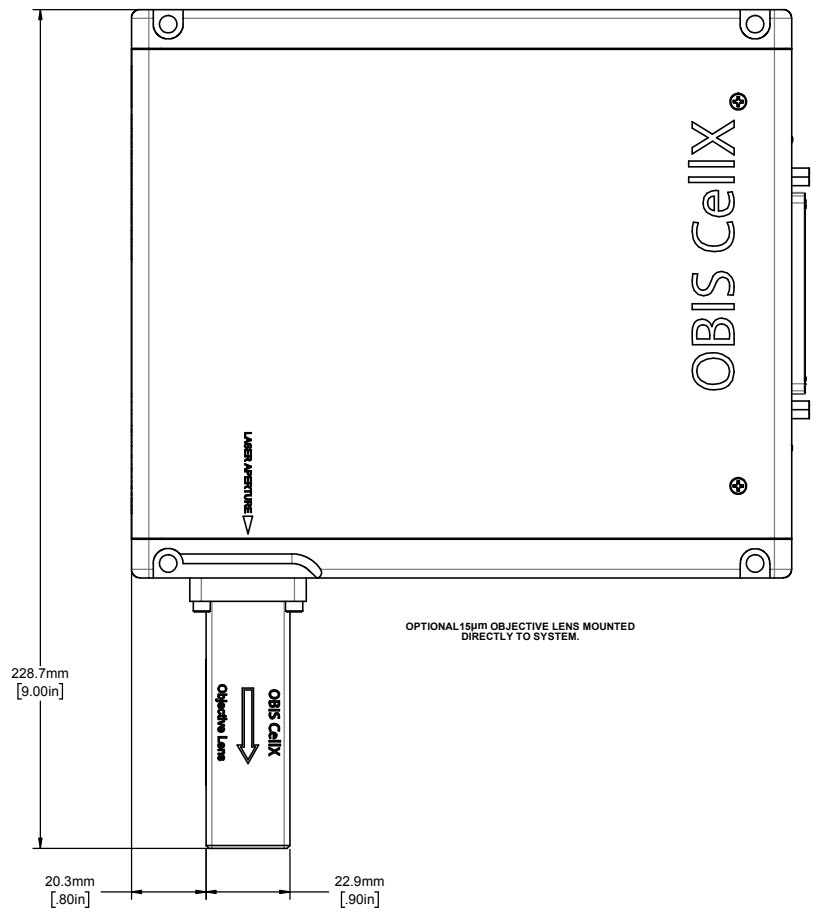
OBIS Cellx
LASER APERTURE
OPTIONAL 15µm OBJECTIVE LENS MOUNTED
DIRECTLY TO SYSTEM.
228.7mm
[9.00in]
OBIS Cellx
Objective Lens
20.3mm
[.80in]
22.9mm
[.90in]

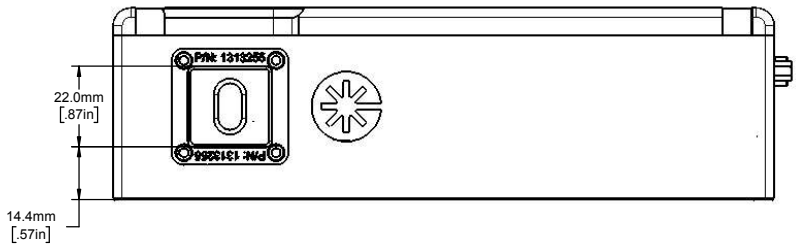
P/N: 1313255
22.0mm
[.87in]
P/N: 1313255
14.4mm
[.57in]

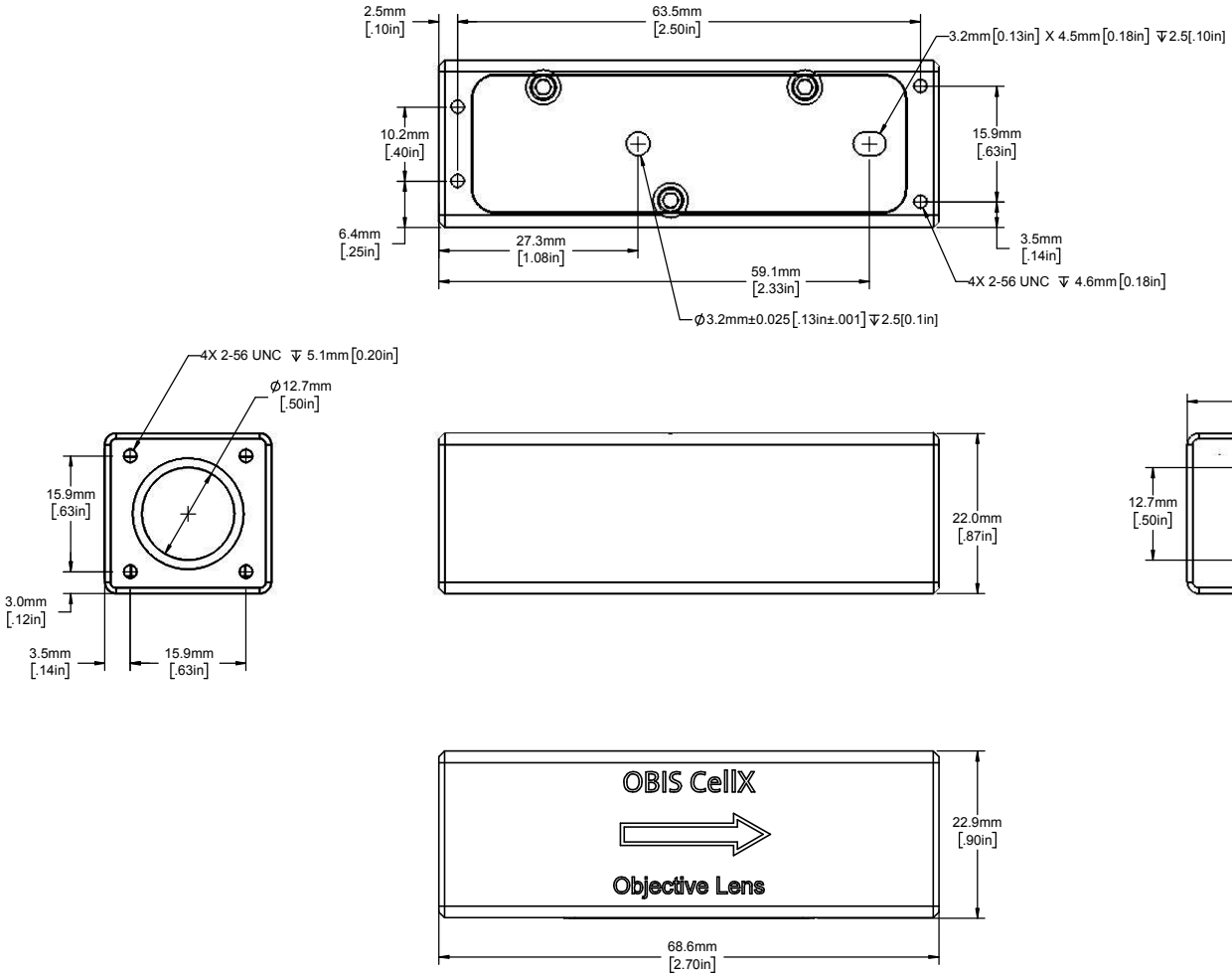
2.5mm
[.10in]
63.5mm
[2.50in]
3.2mm[0.13in] X 4.5mm[0.18in] ↧2.5[.10in]
10.2mm
[.40in]
15.9mm
[.63in]
6.4mm
[.25in]
27.3mm
[1.08in]
59.1mm
[2.33in]
3.5mm
[.14in]
4X 2-56 UNC ↧ 4.6mm[0.18in]
Ø3.2mm±0.025[.13in±.001]↧2.5[0.1in]
4X 2-56 UNC ↧ 5.1mm[0.20in]
Ø12.7mm
[.50in]
15.9mm
[.63in]
3.0mm
[.12in]
3.5mm
[.14in]
15.9mm
[.63in]
22.0mm
[.87in]
11.4mm
[.45in]
12.7mm
[.50in]
10.9mm
[.43in]
6.4mm
[.25in]
OBIS CellX
Objective Lens
22.9mm
[.90in]
68.6mm
[2.70in]

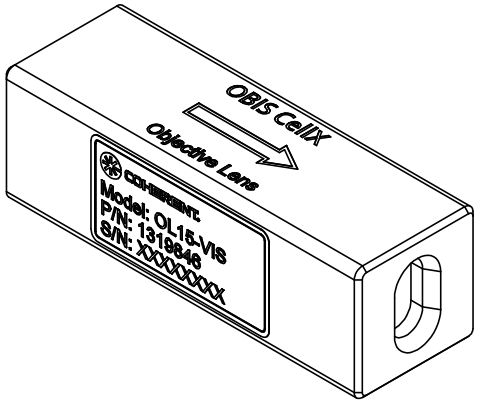
OBIS CellX
Objective Lens
COHERENT
Model: OL15-VIS
P/N: 1319846
S/N: XXXXXXXX

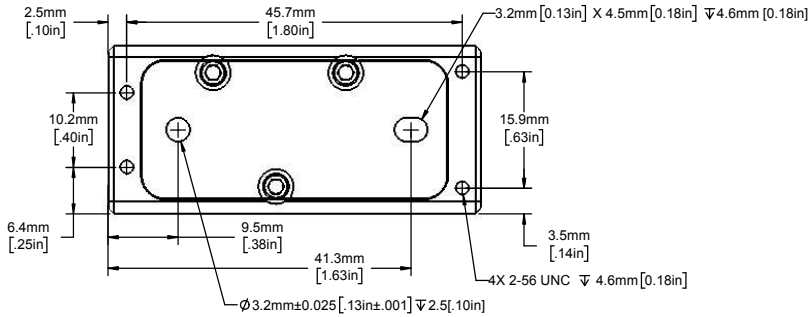
2.5mm
[.10in]
45.7mm
[1.80in]
3.2mm [0.13in] X 4.5mm [0.18in] ↧4.6mm [0.18in]
10.2mm
[.40in]
15.9mm
[.63in]
6.4mm
[.25in]
9.5mm
[.38in]
41.3mm
[1.63in]
3.5mm
[.14in]
4X 2-56 UNC ↧ 4.6mm [0.18in]
Ø3.2mm±0.025 [.13in±.001] ↧2.5 [.10in]

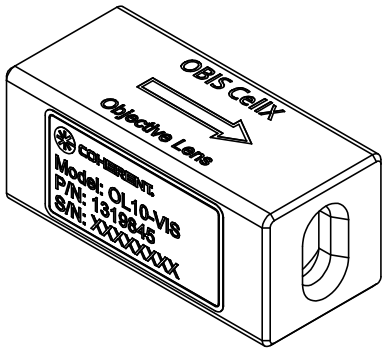
OBIS CellX
Objective Lens
COHERENT
Model: OL10-VIS
P/N: 1319645
S/N: XXXXXXXX

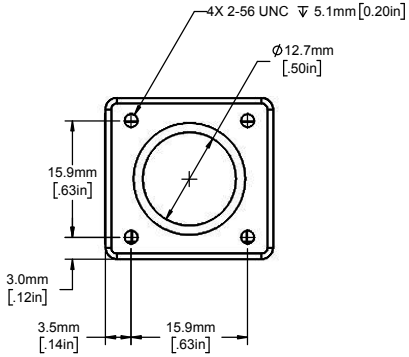
4X 2-56 UNC ↧ 5.1mm [0.20in]
Ø12.7mm
[.50in]
15.9mm
[.63in]
3.0mm
[.12in]
3.5mm
[.14in]
15.9mm
[.63in]

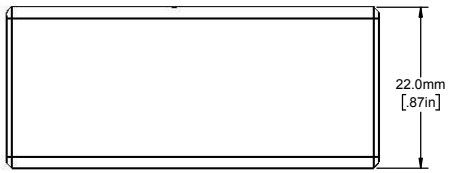
22.0mm
[.87in]

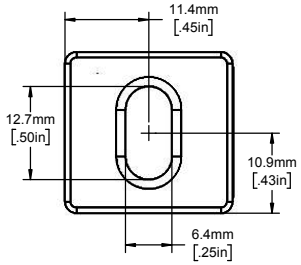
11.4mm
[.45in]
12.7mm
[.50in]
10.9mm
[.43in]
6.4mm
[.25in]

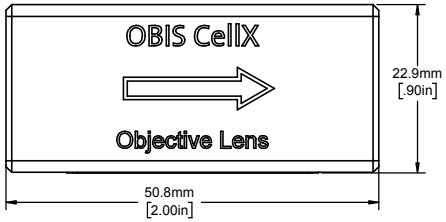
OBIS CellX
Objective Lens
22.9mm
[.90in]
50.8mm
[2.00in]