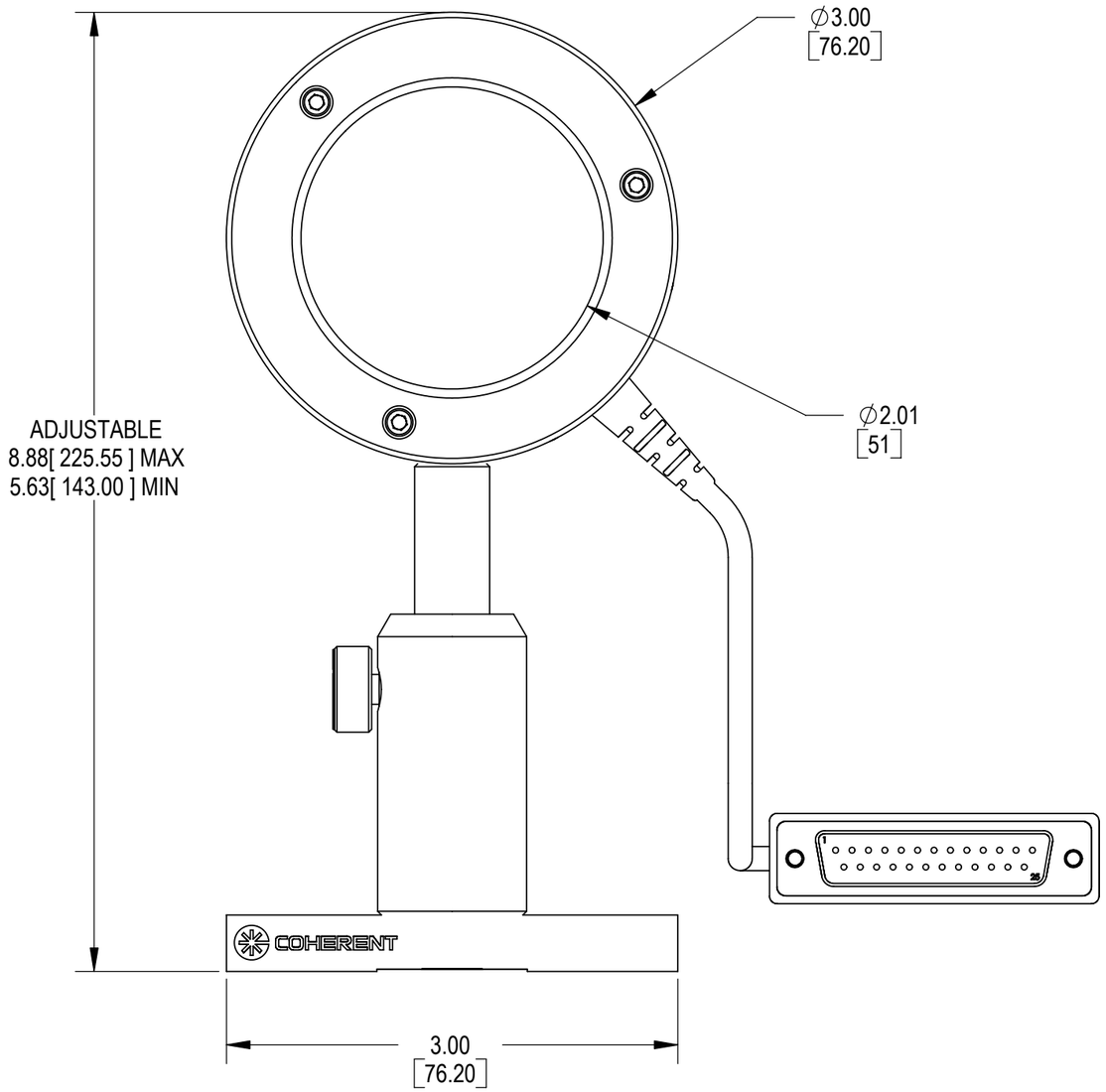
∅3.00
[76.20]
∅2.01
[51]
ADJUSTABLE
8.88[225.55] MAX
5.63[143.00] MIN
COHERENT
3.00
[76.20]

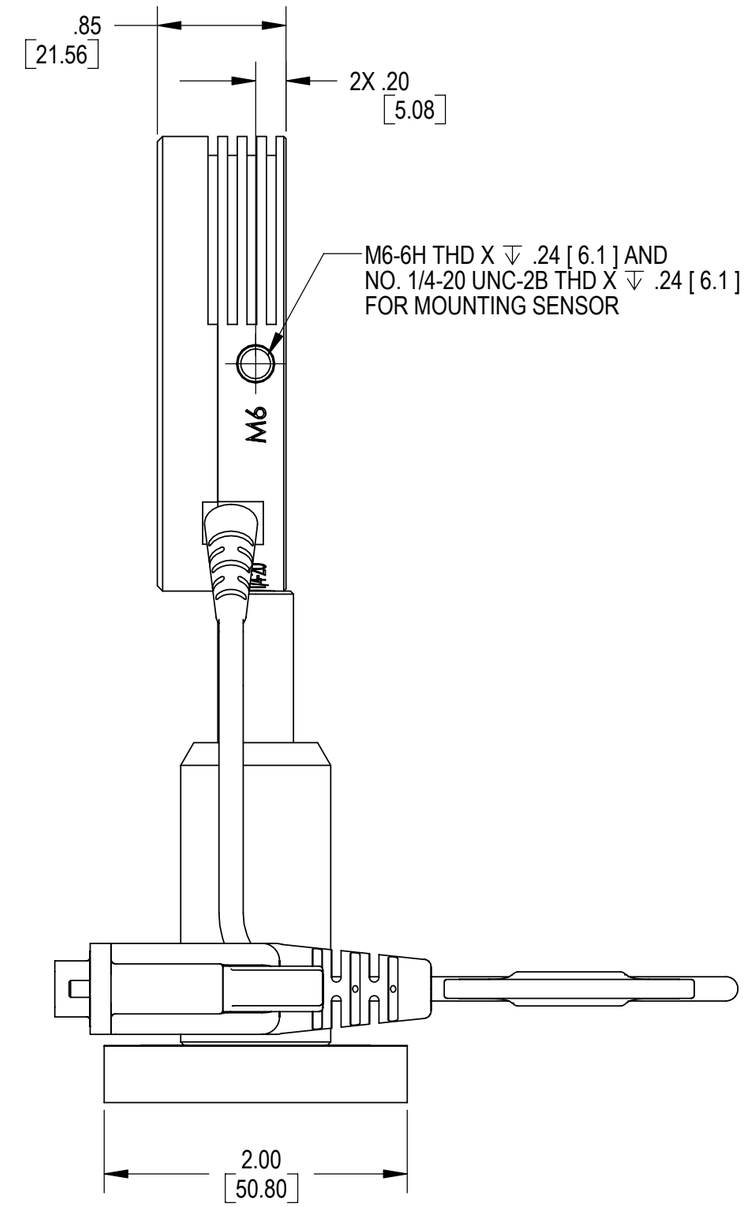
.85
[21.56]
2X .20
[5.08]
M6-6H THD X ↧ .24 [6.1] AND
NO. 1/4-20 UNC-2B THD X ↧ .24 [6.1]
FOR MOUNTING SENSOR
M6
2.00
[50.80]