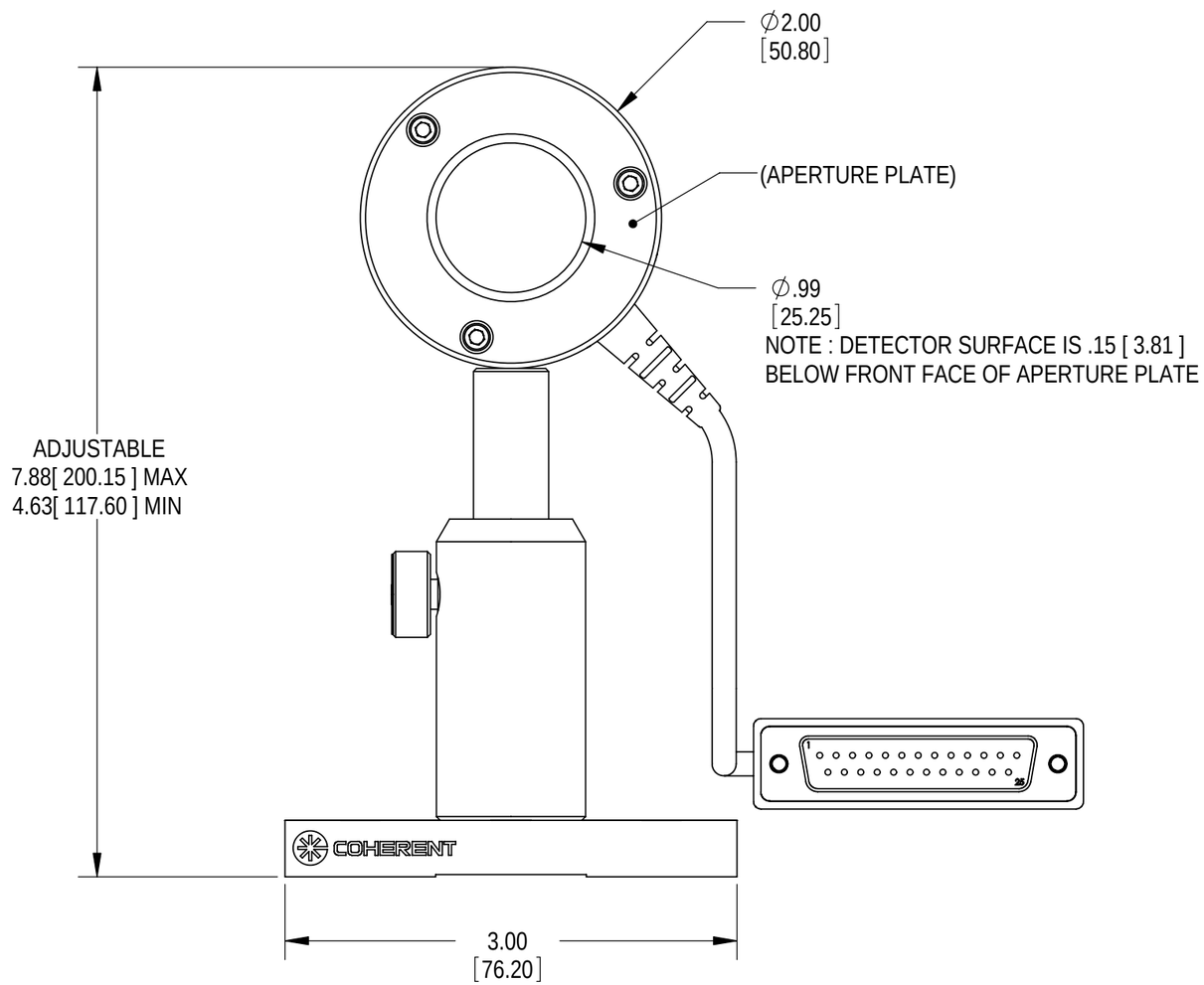
∅2.00
[50.80]
(APERTURE PLATE)
∅.99
[25.25]
NOTE : DETECTOR SURFACE IS .15 [3.81]
BELOW FRONT FACE OF APERTURE PLATE
ADJUSTABLE
7.88[200.15] MAX
4.63[117.60] MIN
COHERENT
3.00
[76.20]

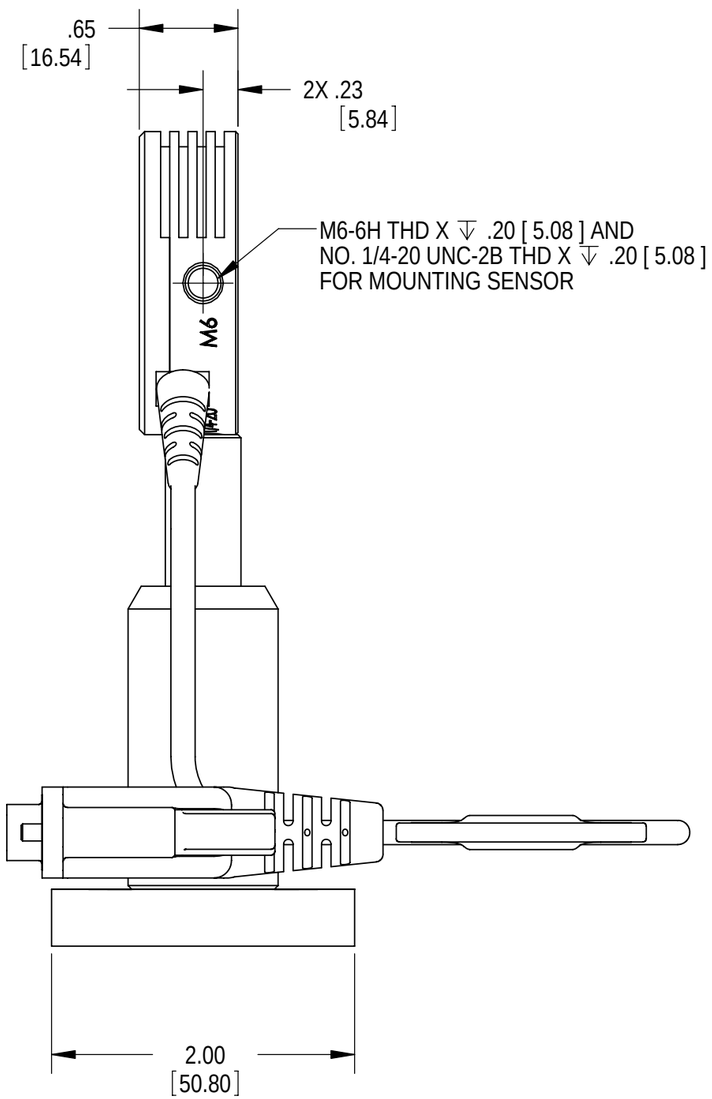
.65
[16.54]
2X .23
[5.84]
M6-6H THD X ↧ .20 [5.08] AND
NO. 1/4-20 UNC-2B THD X ↧ .20 [5.08]
FOR MOUNTING SENSOR
M6
2.00
[50.80]