METABEAM

Advanced Laser Machining Center

Features

- High power and low operating cost sealed CO_2 laser
- Capacitive Auto-Focus to maintain precise nozzle gap when cutting metal
- Auto-Focus for all non-metallic materials
- Part collection drawer. Metal cutting points and choice of cutting substrates
- High flow/pressure adjustable coaxial assist gas jet
- Gull wing, dual access doors with removable pallet, front and rear pass through

Options

- Machine vision
- Auto-pallet loading
- Bar Code job load

Metal Cutting without Compromise

The METABEAM is the compact and powerful answer for prototype to high volume manufacturing applications.

The METABEAM is optimized for sheet metal cutting up to 6 mm thickness while maintaining stunning performance on non-metal cutting and engraving applications. Simple user interface and job loading software simplifies work set up and increases productivity.

Mechanical Specifications
METABEAM 400

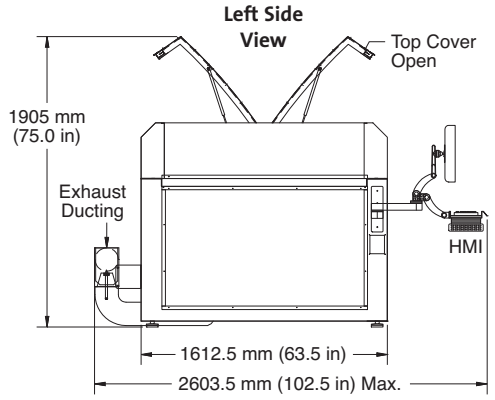

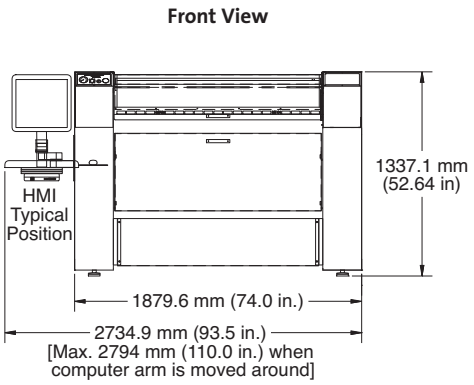

Superior Reliability & Performance

METABEAM™
Advanced Laser Machining Center

System Specifications

	METABEAM 400	METABEAM 1000
Laser Power/Peak Power[1] (W)	400	1000
Dimensions (L x W x H)	1630 x 1990 x 1320 mm (64.2 x 78.4 x 52.0 in.)	1727 x 2261 x 1397 mm (66.0 x 89.0 x 55.0 in.)
Weight	725 kg (1600 lbs.)	950 kg (2090 lbs.)
Cutting Height	1020 mm (40.0 in.)	
Working Range	x = 1220 mm (48.0 in.) y = 1220 mm (48.0 in.) z = 300 mm (12.0 in.)	x = 1270 mm (50.0 in.) y = 1270 mm (50.0 in.) z = 280 mm (11.0 in.)
Maximum Speed	50,800 mm (2000 in.)/min. cutting 91,500 mm (3600 in.)/min. rapid positioning 91,500 mm (3600 in.)/min. raster engraving	
Positioning	Linear encoders with 2 micron resolution in closed loop with brushless servo motors	
Accuracy	25 µm (0.001 in.) positioning accuracy[2] 5 µm (0.0002 in.) repeatability	
Contouring	Full look-ahead contouring capability	
Materials	Metal, Plastics, Wood, Paper, Composites, Fabric, Rubber	
Software Interface LaserLink program including:	Windows 7 support G-code support AI, DXF, HPGL, DWG, Gerber, JPG, BMP, TIF file import Full geometry editing Editable database of laser parameters Job estimator software Job management software	
Cutting Pallets	Removable pallet system with front and rear pass-through Metal cutting points or honeycomb work support	
Laser Power Control	Digital laser power control Power proportional to velocity	
Focusing	Auto Focus, with Active Capacitive following for metal	
Exhaust/Vacuum Bed	Bed vacuum material hold-down plenum and part collection drawer External high pressure exhaust blower recommended (not supplied with system)	
Cooling	External chiller	
PC/File Server	Windows/Ethernet	
Power (VAC)	208 to 240V or 380 to 440V, 47 to 63 Hz, three-phase, 5 wire, 50A	
Safety	Safety interlocks on all covers and enclosures Class I system (Complies with 21 CFR Chapter 1, Subchapter J)	
User Controls	Touch Screen Control panel Jog, Bed height controls Home, Park, Load buttons Exhaust, gas assist controls Editing of laser settings Networked HMI workstation Auto restart	

[1] These specifications are applicable as of September 2009 and are subject to change without notice.
[2] Accuracy quoted is under controlled conditions. Accuracy may vary depending on conditions in customer's facility.

Coherent follows a policy of continuous product improvement. Specifications are subject to change without notice.

Coherent's scientific and industrial lasers are certified to comply with the Federal Regulations (21 CFR Subchapter J) as administered by the Center for Devices and Radiological Health on all systems ordered for shipment after August 2, 1976.

Coherent offers a limited warranty for all METABEAM laser machining centers. For full details of this warranty coverage, please refer to the Service section at www.Coherent.com or contact your local Sales or Service Representative.

COHERENT®

www.Coherent.com

Coherent, Inc.
5100 Patrick Henry Drive
Santa Clara, CA 95054
phone (800) 527-3786
(408) 764-4983
fax (408) 764-4646
e-mail tech.sales@Coherent.com

Benelux +31 (30) 280 6060
China +86 (10) 8215 3600
France +33 (0)1 8038 1000
Germany +49 (6071) 968 333
Italy +39 (02) 31 03 951
Japan +81 (3) 5635 8700
Korea +82 (2) 460 7900
UK +44 (1353) 658 833

Printed in the U.S.A. MC-112-10-0M1111Rev.A
Copyright ©2011 Coherent, Inc.